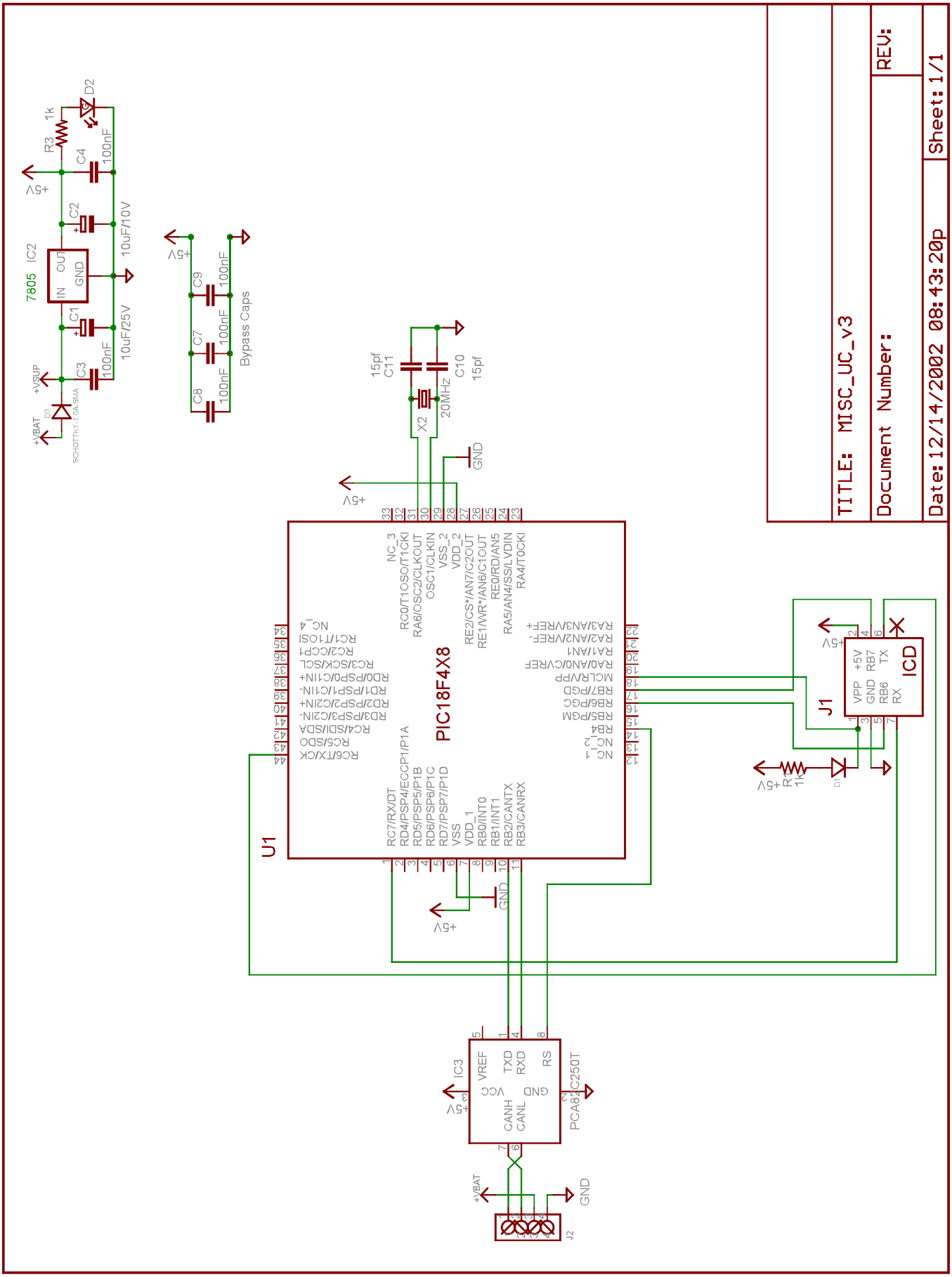
TITLE: MISC_UC_v3
Document Number:
REV:
Date: 12/14/2002 08:43:20p
Sheet: 1/1
U1
PIC18F4X8
IC2
7805
IN
OUT
GND
C1
C2
C3
C4
R3
1k
D2
D3
SCHOTTKY-10A-SMA
+VSUP
+VBAT
+5V
10uF/25V
10uF/10V
100nF
C7
C8
C9
Bypass Caps
X2
20MHz
C10
C11
15pf
GND
J1
ICD
VPP
+5V
GND
RB7
RB6
TX
RX
IC3
PCA82C250T
VREF
TXD
RXD
RS
VCC
GND
CANH
CANL
J2